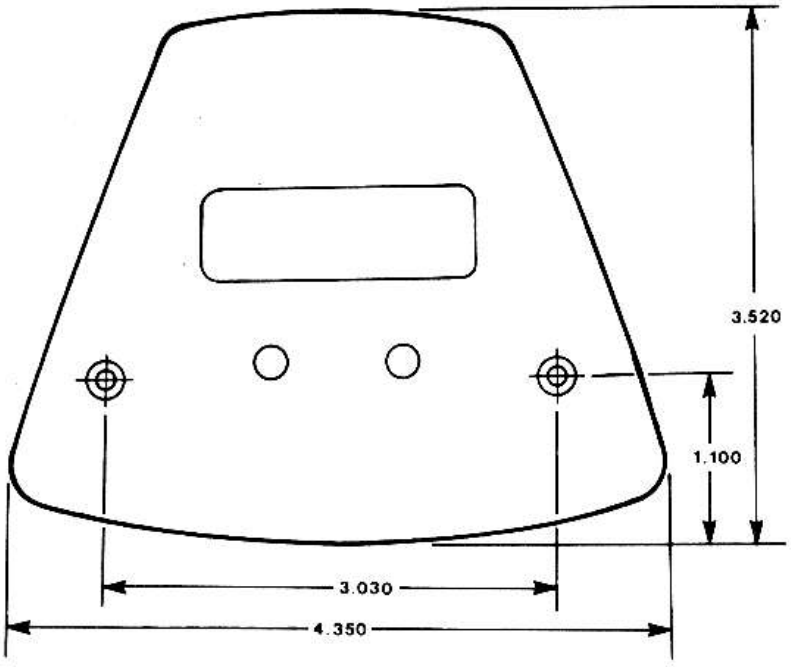
3.520
1.100
3.030
4.350

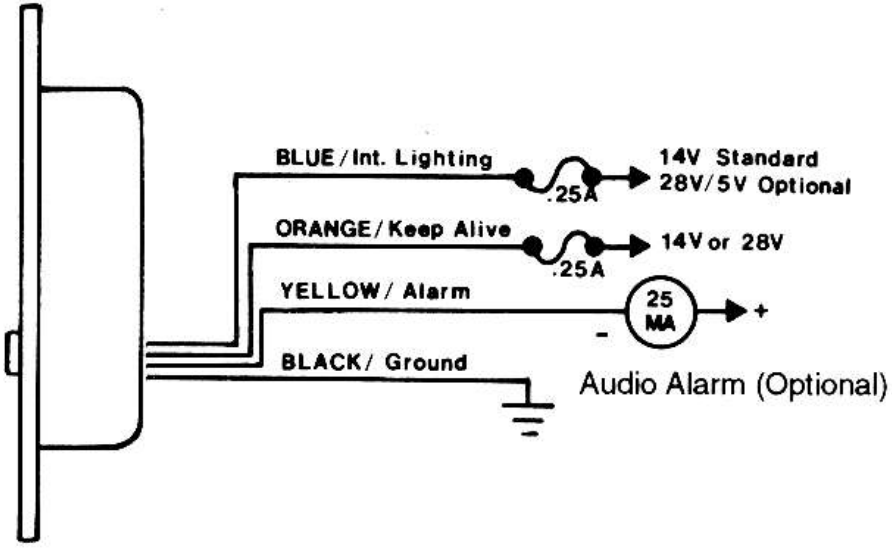
BLUE / Int. Lighting
.25A
14V Standard
28V/5V Optional
ORANGE/ Keep Alive
.25A
14V or 28V
YELLOW/ Alarm
25
MA
+
-
BLACK/ Ground
Audio Alarm (Optional)