RTX

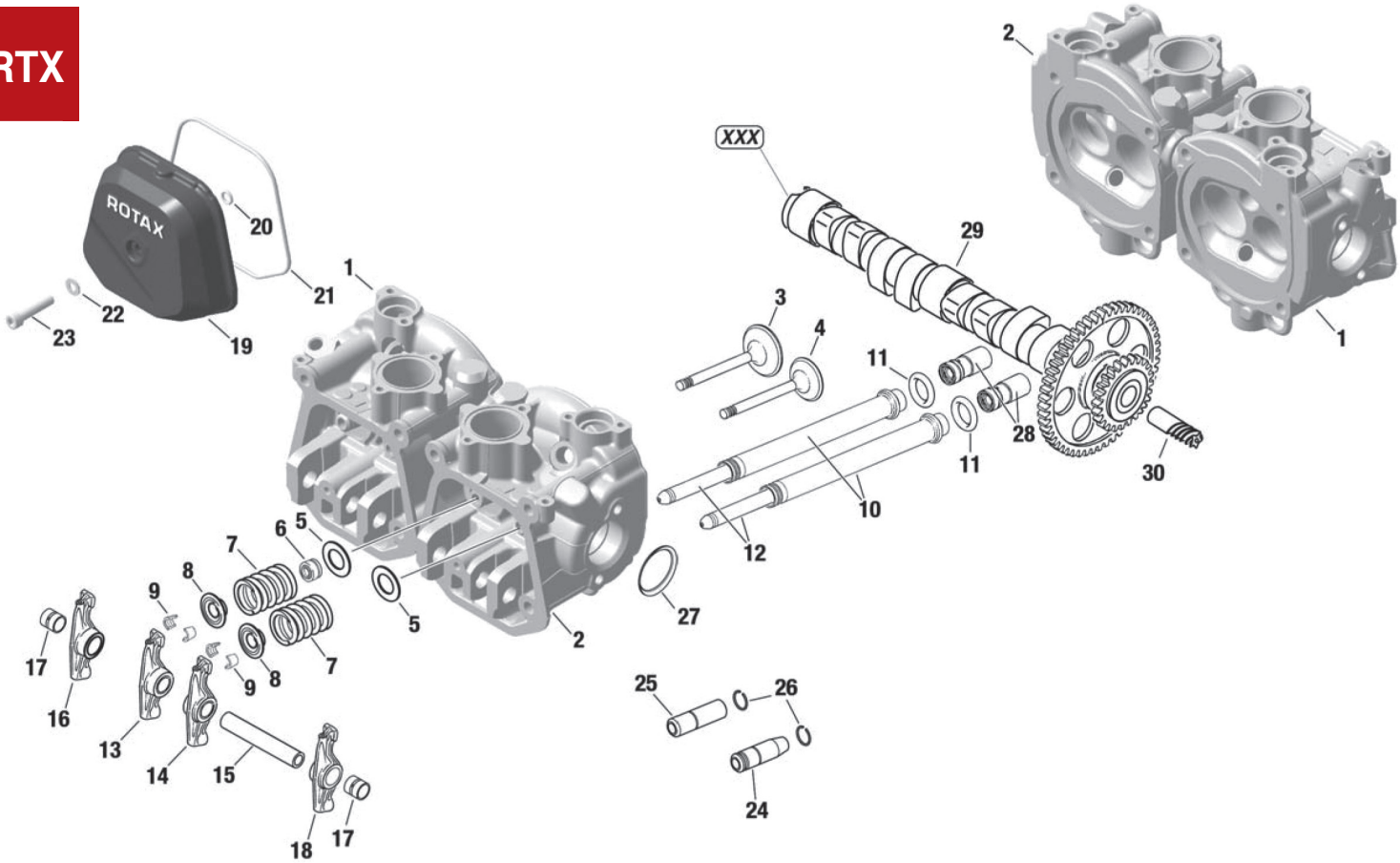

CYLINDERHEAD, VALVE TRAIN, VALVE COVER

Item No.	Part No	Description	Qty. Req. 912 UL	912 ULS	914 UL	Price
1	413-236	CYLINDER HEAD 2/3 ASSEMBLY	2ao		2ao	**$1,513.74**
1	413-185	CYLINDER HEAD 2/3 ASSEMBLY		2ao		**$1,548.94**
2	413-195	CYLINDER HEAD 1/4 ASSEMBLY		2b		**$1,549.45**
2	413-246	CYLINDER HEAD 1/4 ASSEMBLY	2b		2b	**$1,513.74**
3	854-101	INTAKE VALVE 38 MM	4	4	4	**$187.82**
4	854-113	EXHAUST VALVE 32 MM			4p	**$304.00**
4	854-111	EXHAUST VALVE 32 MM	4	4	4	**$304.00**
5	926-210	SHIM 16/27.9/1	8d	8	8d	**$3.73**
6	230-810	VALVE STEM SEAL	4	4	4	**$10.04**
7	838-156	VALVE SPRING	8d	8	8d	**$28.42**
8	854-186	OIL RETURN TUBE	8	8	8	**$24.57**
9	253-092	VALVE COTTER	16	16	16	**$3.74**
10	924-440	OIL RETURN TUBE	8	8	8	**$39.54**
11	850-930	O-RING 16x5	8	8	8	**$8.79**
12	854-862	VALVE PUSH-ROD ASSEMBLY	8	8	8	**$191.77**
15	854-193	ROCKER ARM SHAFT	4	4	4	**$40.77**
15	854-197	ROCKER ARM SHAFT	(4)f	(4)f	(4)f	**$74.40**
16	854-383	ROCKER ARM LEFT ASSEMBLY	4g	4g	4g	**$301.40**
17	933-396	VESPEL BUSHING VESPEL	8g	8g	8g	**$52.06**
18	854-393	ROCKER ARM RIGHT ASSEMBLY	4g	4g	4g	**$301.40**
19	612-263	VALVE COVER BLACK	4			**$199.88**
19	612-262	VALVE COVER RED			4	**$199.88**
19	612-260	VALVE COVER GREEN		4		**$196.63**
19	612-180	VALVE COVER BLUE		4		**$181.36**
20-21	881-920	O-RING SET	1	1	1	**$65.71**
20	430-205	O-RING 6.4x1.8	4	4	4	**$4.99**
21	250-285	O-RING 105x2.5	4	4	4	**$29.31**
22	927-942	WASHER 6.0/12/1	4	4	4	**$0.76**
23	840-887	ALLEN SCREW M6x30	4	4	4	**$0.69**
24	253-114	INLET VALVE GUIDE	4h	4h	4h	**$27.25**
25	854-224	INLET VALVE GUIDE	4i	4i	4i	**$89.62**
26	245-440	RETAINING RING	8j	8j	8j	**$0.57**
27	931-920	GASKET RING	ARk	ARk	ARk	**$67.32**
28	881-832	HYDRAULIC VALVE TAPPET SET	1n	1n	1n	**$422.10**
29	837-196	CAMSHAFT 227° ASSEMBLY	1lm		1lm	**$1,595.81**
29	837-418	CAMSHAFT 230° ASSEMBLY		1lm		**$1,595.81**

- Items not illustrated

a for cylinder 2 and 3
b for cylinder 1 and 4
c Up to engine S/N
912 A: 4,410.203
912 F: 4,412.756
912 UL: 4,401.879
914 F: 4,420.038
914 UL: 4,417.597
Single valve springs and double valve springs if required are allowed to be mounted in one engine.
d From engine S/N
912 A: 4,410.204
912 F: 4,412.757
912 UL: 4,401.880
914 F: 4,420.039
914 UL: 4,417.598
e With sintered bronze bushing
f Oversize +0.2 mm (0.008 in.)
g Rocker arm version with vespel bushing
From engine S/N
912 A: 4,410.472
912 F: 4,412.817
912 S: 4,922.768
912 UL: 4,404.621
912 ULS: 4,427.487
914 F: 4,420.314
914 UL: 4,418.104
h for inlet valve, chafe up to new measurement
i for outlet valve, chafe up to new measurement
j **NOTICE**: Use only once!
k for rework of exhaust port
See Overhaul Manual of the respective engine type, current issue.
l Marked with S/N
m Without worm gear
n pre-filled, 8 parts per set
o Cylinder heads where the coolant temperature is measured.
p see SI-914-30