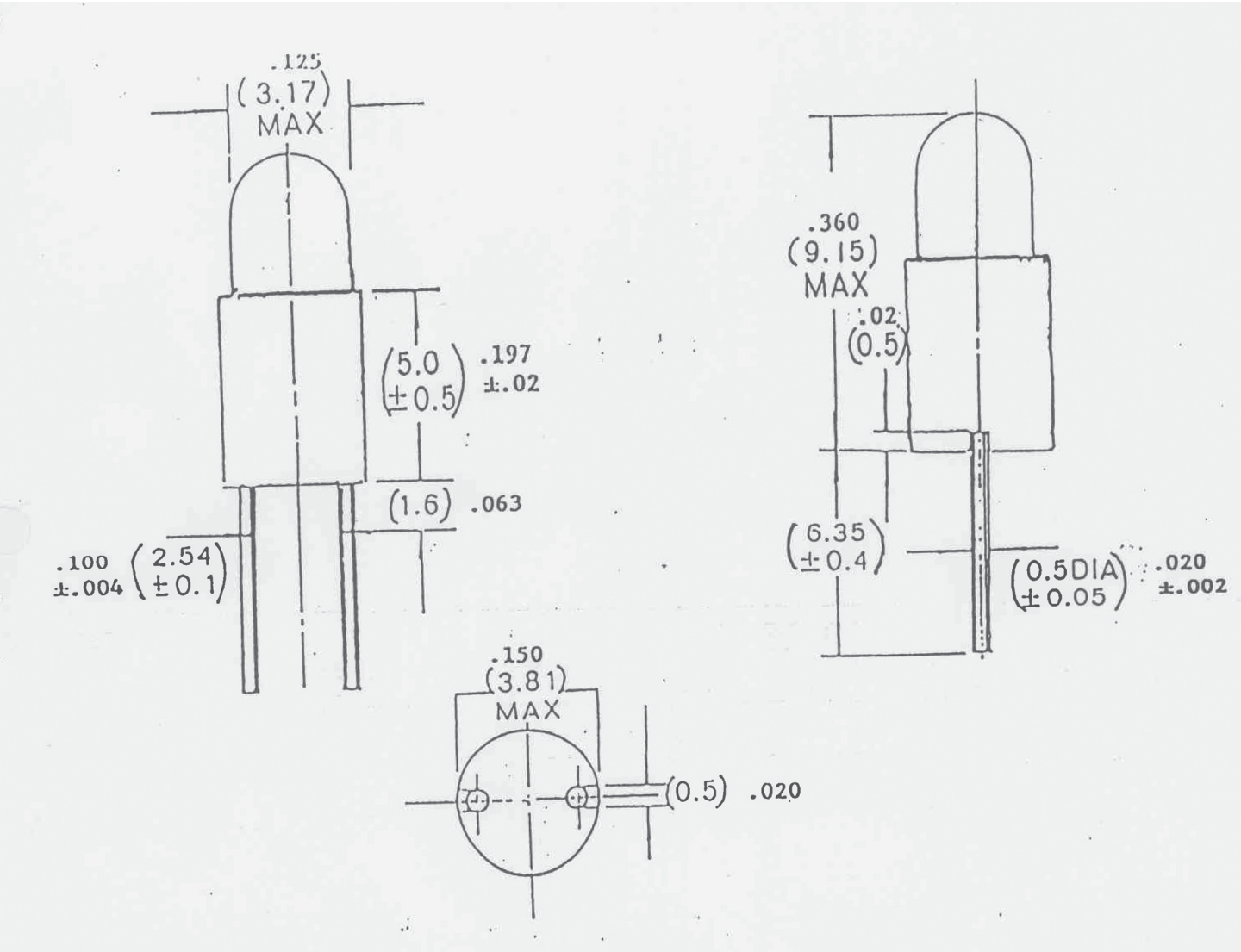
.125
(3.17)
MAX
(5.0
±0.5)
.197
±.02
(1.6)
.063
.100
±.004
(2.54
±0.1)
.360
(9.15)
MAX
.02
(0.5)
(6.35
±0.4)
(0.5DIA
±0.05)
.020
±.002
.150
(3.81)
MAX
(0.5)
.020